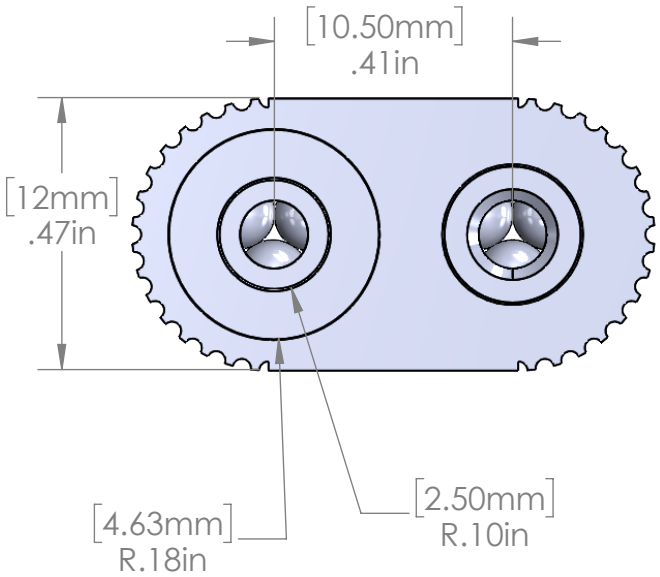

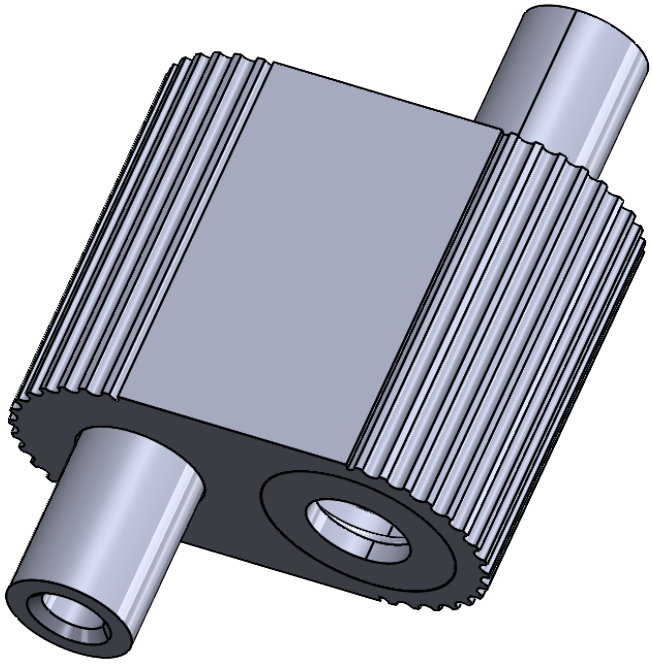

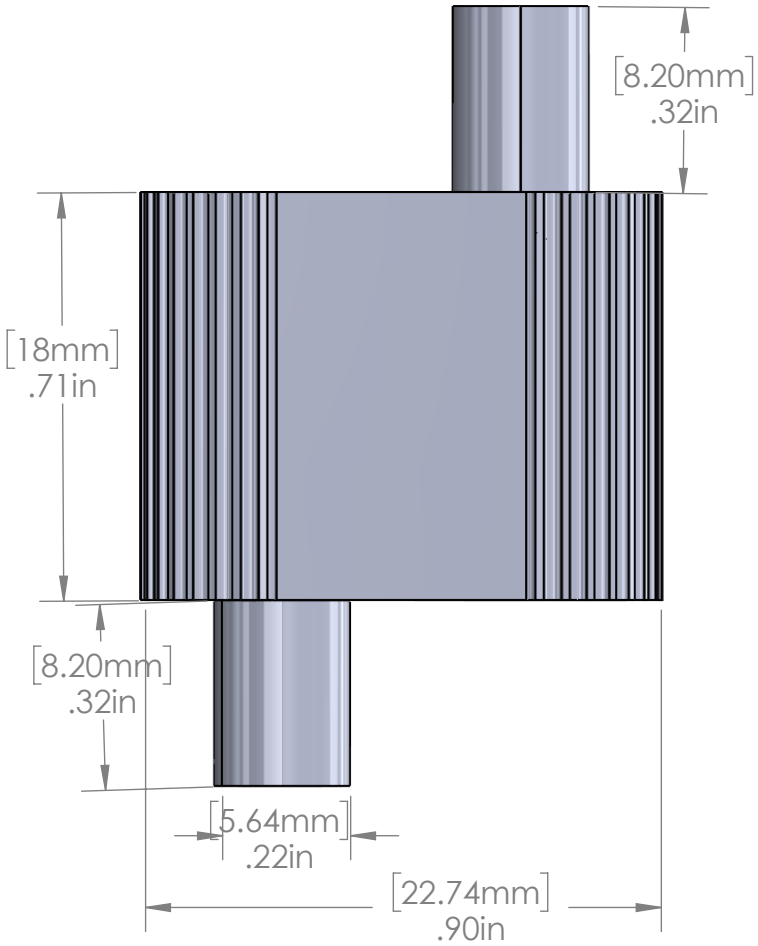

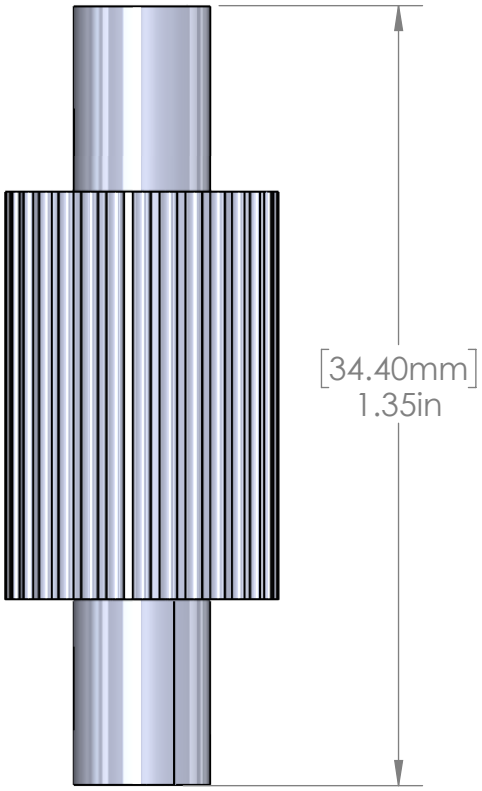

Aluminum Looping Cable Gripper for 5/64" & 3/32"
Cable Temparure Rated to 300 Deg F
Max Safe Load with 5:1 Safety Factor
Galvanized Steel 7 x 7 Strand
5/64" Cable - 123 lbs 3/32" Cable - 154 lbs

This Document Contains Proprietory Data that is property of Pendant Systems which reserves all rights to it. Unauthorized use without authorization is prohibited.

Pendant Systems
1670 Winchester Rd.
Bensalem, PA 19020
P-215-638-8552
F-215-638-8554
www.PendantSystems.com

UNLESS OTHERWISE SPECIFIED DIMENSIONS ARE IN BOTH INCHES & MILLIMETERS UNLESS OTHERWISE NOTED TOLERANCES: LINEAR: XX= .02" XXX= ±.010" ANGULAR: ± 1 Degree	FINISH: Shot Blast Aluminum	Part # AL-LG 3-32	
DO NOT SCALE DRAWING	MATERIAL: Aluminum	Title: 5/64" & 3/32" Looping Gripper	REVISION
DEBUR AND BREAK SHARP EDGES			
DRAWN DATE: 9/14/22	Drawn By: MCL	SCALE: NTS / SHEET 1 OF 1	ANY