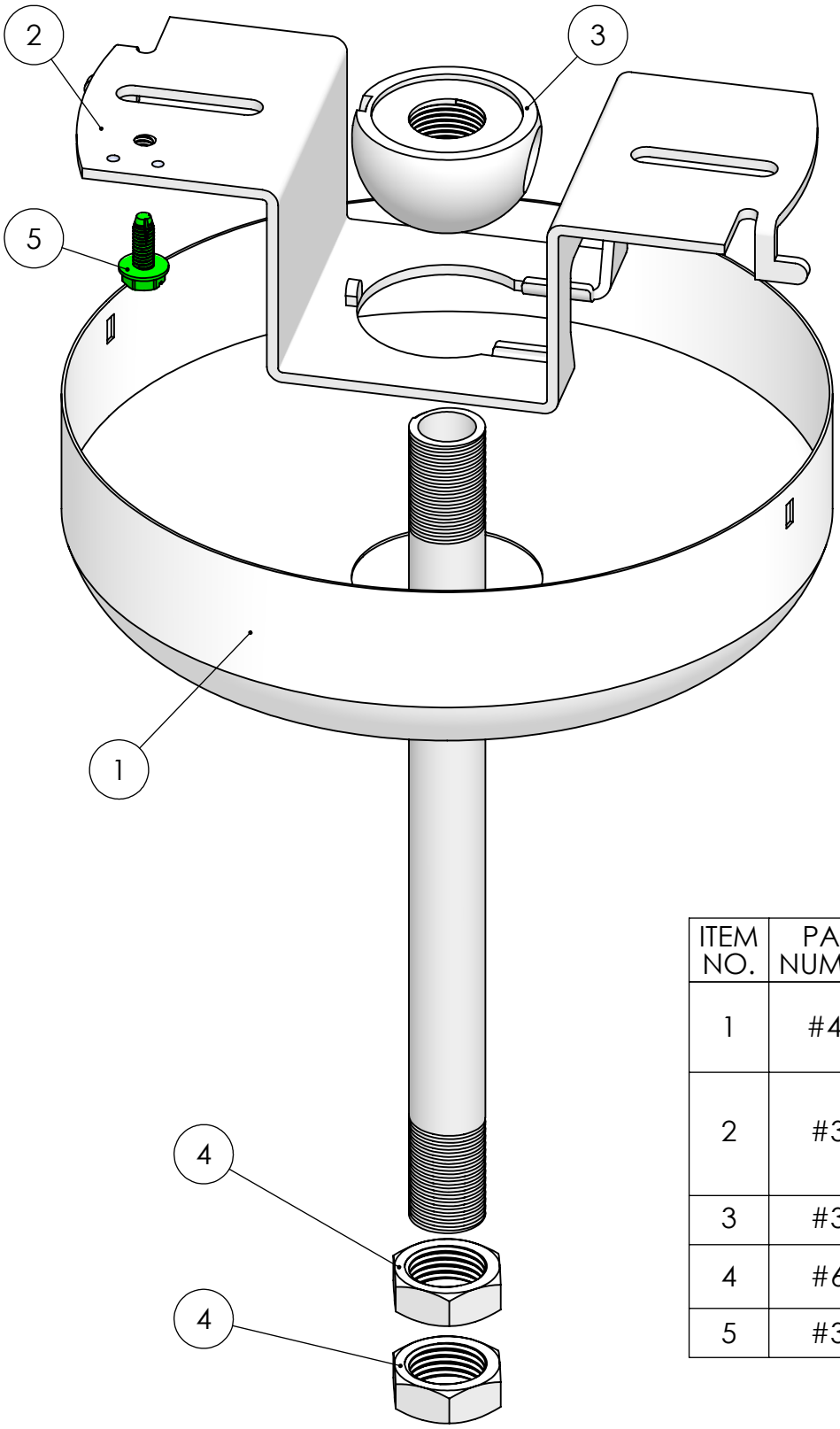

ITEM NO.	PART NUMBER	DESCRIPTION	QTY.
1	#43	5" Diameter x 1 1/2" H White 1 1/4" Center Hole with side slots for #33	1
2	#33	Swivel Crossbar for #34,#35 ,#147, & #272 ADJ Half Balls. 2" W x 4 7/8" L x 1 3/8" H x 14 Gauge	1
3	#35	1/4" IP Tap Half Ball	1
4	#64	1/4" IP x 3/4 O.D. x 1/4" Thick Zinc Plated	2
5	#32	8/32 Green Ground Screw	1

STEM LENGTH WILL VARY. ORDER SEPARATELY
C446 USED WITH STEM 1/4" IP
1/4" IPS .500"-.510" O.D. 18 T.P.I.

*45° SWIVEL

Pendant Systems
1670 Winchester Rd.
Bensalem, PA 19020
P-215-638-8552
F-215-638-8554
www.PendantSystems.com

UNLESS OTHERWISE SPECIFIED DIMENSIONS ARE IN BOTH INCHES & MILLIMETERS UNLESS OTHERWISE NOTED TOLERANCES:
LINEAR: XX= .02" XXX= ±.010" ANGULAR: ± 1 Degree

FINISH:

TITLE: C446

DO NOT SCALE DRAWING

MATERIAL:

Part #

DEBUR AND BREAK SHARP EDGES

REVISION

DRAWN DATE: 6/14/16

Drawn By: MWR

SCALE: NTS

SHEET 1 OF 1