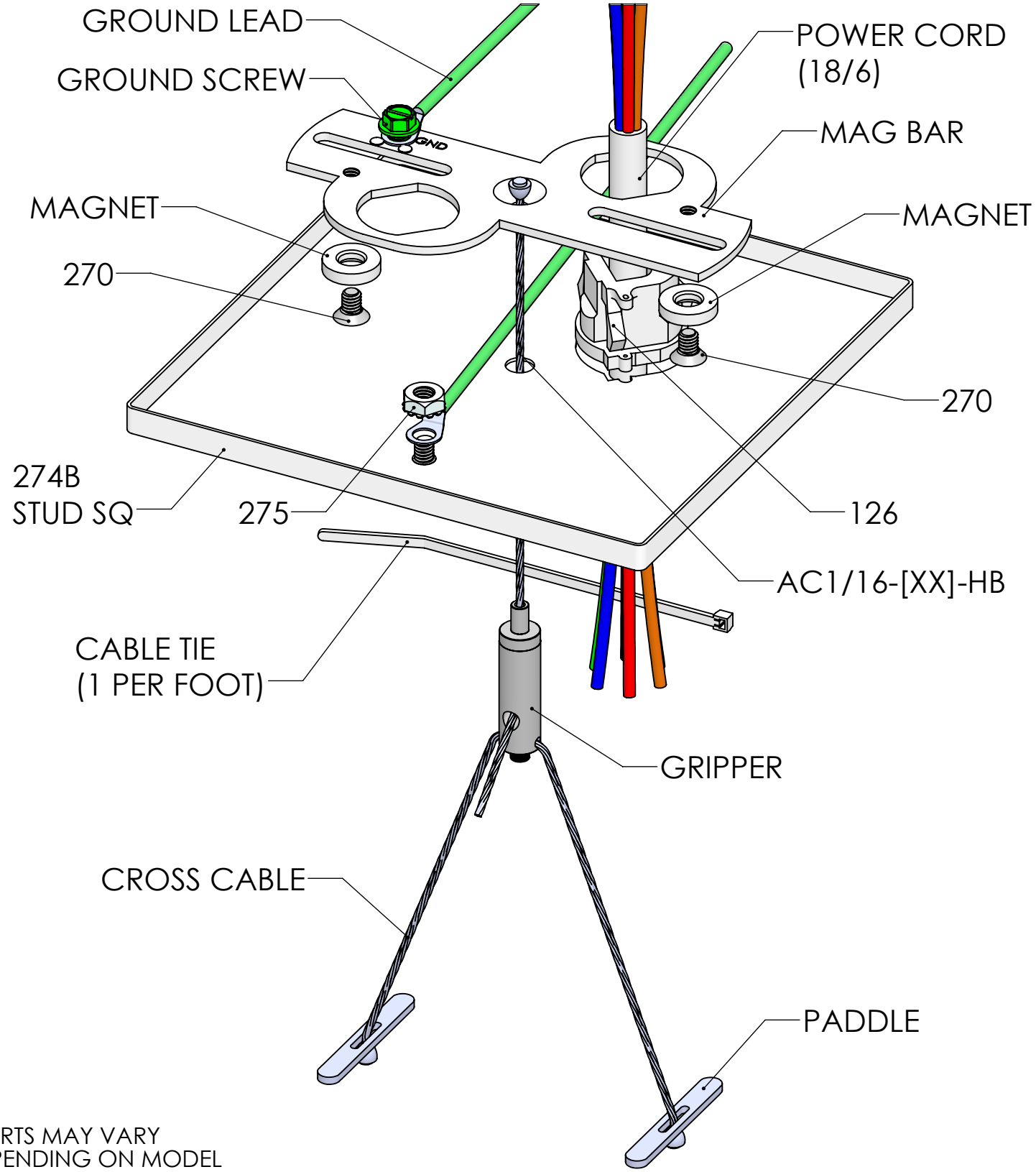

*PARTS MAY VARY
DEPENDING ON MODEL

This Document Contains Proprietory Data that is property of Pendant Systems which reserves all rights to it. Unauthorized use without authorization is prohibited.

Pendant Systems
1670 Winchester Rd.
Bensalem, PA 19020
P-215-638-8552
F-215-638-8554
www.PendantSystems.com

UNLESS OTHERWISE SPECIFIED DIMENSIONS ARE IN BOTH INCHES & MILLIMETERS UNLESS OTHERWISE NOTED TOLERANCES:
LINEAR: XX= .02" XXX= ±.010" ANGULAR: ± 1 Degree

FINISH:

Part #
Power Feed MAG Mount SQ w-PD Cross 18-6

DO NOT SCALE DRAWING

MATERIAL:

Title:

DEBUR AND BREAK SHARP EDGES

REVISION

DRAWN DATE: 4/26/18

Drawn By: MWR

SCALE: NTS

SHEET 1 OF 1