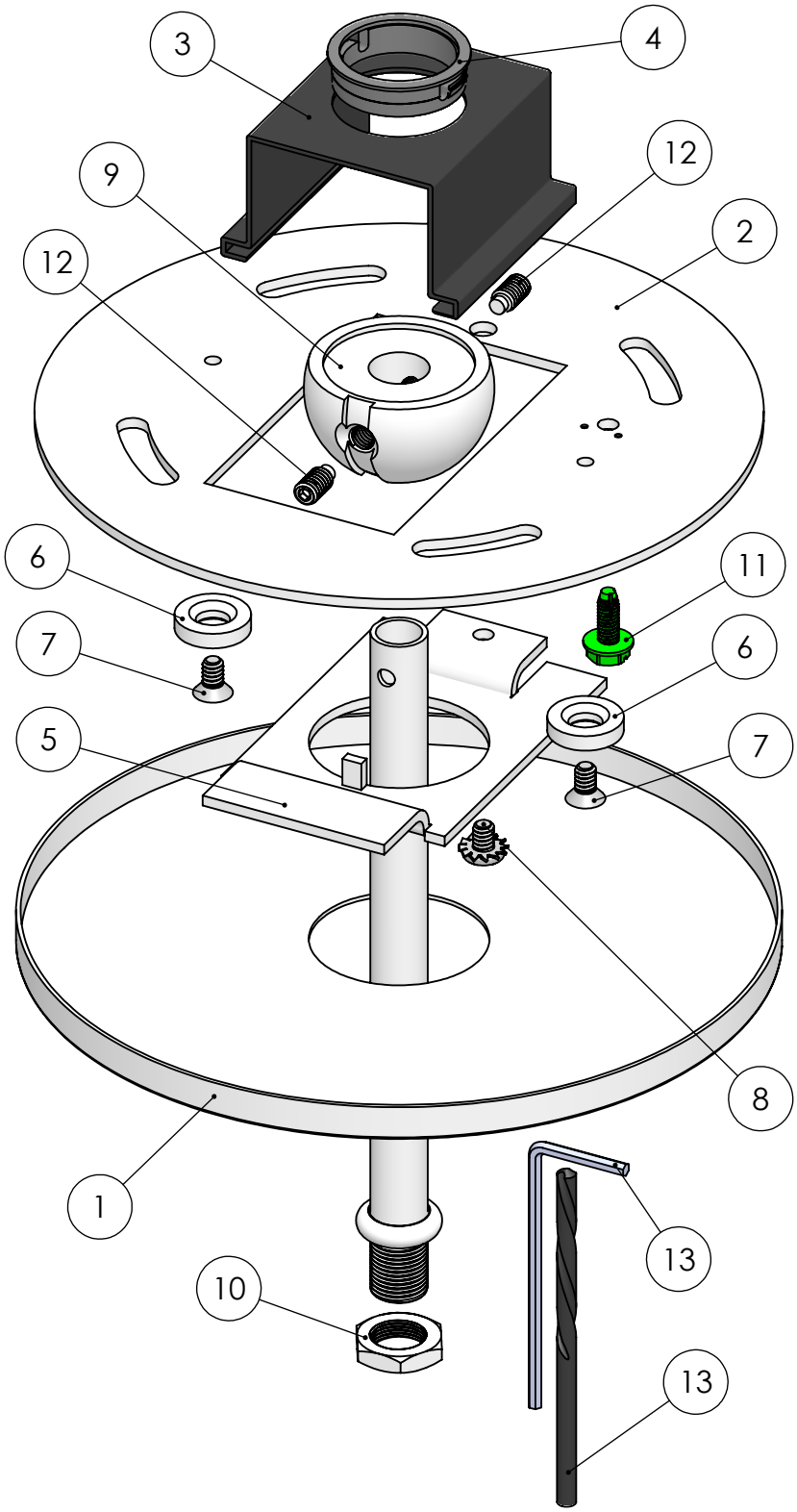

ITEM NO.	PART NUMBER	DESCRIPTION	QTY.
1	276	5" Round w/ 1.18" CH	1
2	MP Crossbar Round	4.75" Round Crossbar .080" Material Thickness Zinc Plated Steel	1
3	MP Swivel Clip	Mono Point Swivel Retaining Clip for MP-Plate HB Spring Steel	1
4	#237	.875" Hole Bushing .945" W x.750" I.D. x .250" H .063" Max Panel Thickness	1
5	MP Plate HB	Monopoint Plate for Half Ball for MP Crossbar 2.82" L x 1.650" W x .075" Material Thickness Half Ball Opening for #35,#34 and #147 Tapped 8/32" Hole Zinc Plated Steel	1
6	Magnet	#6 & #8 Magnet	2
7	271	6/32" x 1/4" L Flat Head Philips Machine Screw	2
8	183	8/32" x 1/4" Philip Head Ext Sems Steel Zinc Screw	1
9	#272 ADJ	1/8" IP Slip Half Ball Bright Casting	1
10	#133	1/8" IP x 9/16" O.D. x 1/8" Thick Zinc Plated	1
11	#32	8/32 Green Ground Screw	1
12	273	8/32" x .3235" L Half Dog Point Allen Set Screw	2
13	5/64" Tool Kit	5/64" Allen Wrench & 1/8" Drill Bit	1

STEM LENGTH WILL VARY. ORDER SEPARATELY
MP SW 1/8 RD MAG ADJ TK USED WITH STEM
1/8" IP
1/8" IPS .375"-.380" O.D. 27 T.P.I

Pendant Systems
1670 Winchester Rd.
Bensalem, PA 19020
P-215-638-8552
F-215-638-8554
www.PendantSystems.com

UNLESS OTHERWISE SPECIFIED DIMENSIONS ARE IN BOTH INCHES & MILLIMETERS UNLESS OTHERWISE NOTED TOLERANCES:
LINEAR: XX= .02" XXX= ±.010" ANGULAR: ± 1 Degree

FINISH:

TITLE: MP SW 1-8 RD MAG ADJ TK

DO NOT SCALE DRAWING

MATERIAL:

Part #

DEBUR AND BREAK SHARP EDGES

REVISION

DRAWN DATE: 2/2/17

Drawn By: MWR

SCALE: NTS

SHEET 1 OF 2

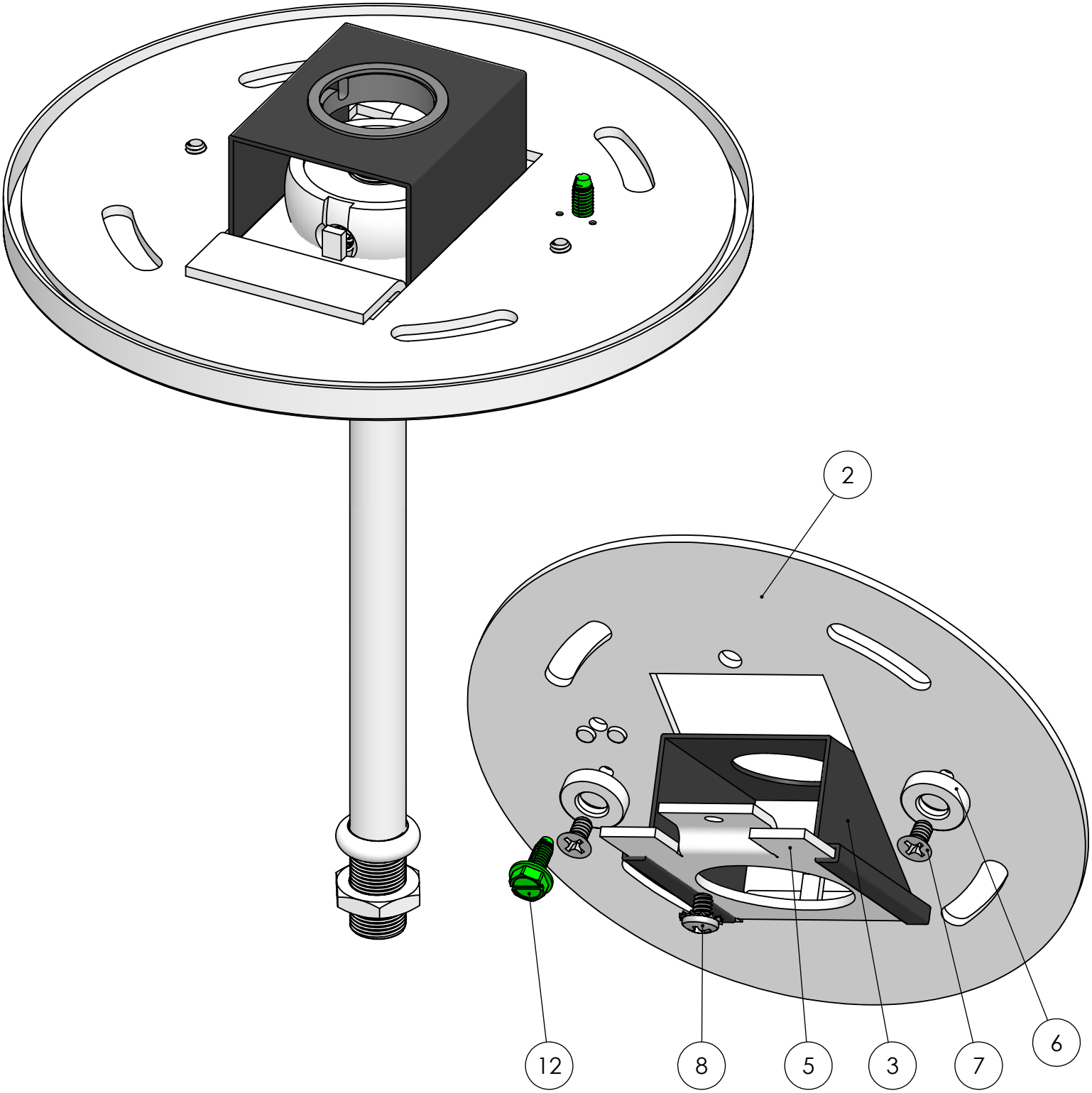

		This Document Contains Proprietory Data that is property of Pendant Systems which reserves all rights to it. Unauthorized use without authorization is prohibited.	**Pendant Systems** 1670 Winchester Rd. Bensalem, PA 19020 P-215-638-8552 F-215-638-8554 www.PendantSystems.com
UNLESS OTHERWISE SPECIFIED DIMENSIONS ARE IN BOTH INCHES & MILLIMETERS UNLESS OTHERWISE NOTED TOLERANCES: LINEAR: XX= .02" XXX= ±.010" ANGULAR: ± 1 Degree	FINISH:	TITLE: MP SW 1-8 RD MAG ADJ TK Assembled	
DO NOT SCALE DRAWING	MATERIAL:	Part #	
DEBUR AND BREAK SHARP EDGES			REVISION
DRAWN DATE: 2/2/17	Drawn By: MWR	SCALE: NTS	SHEET 2 OF 2