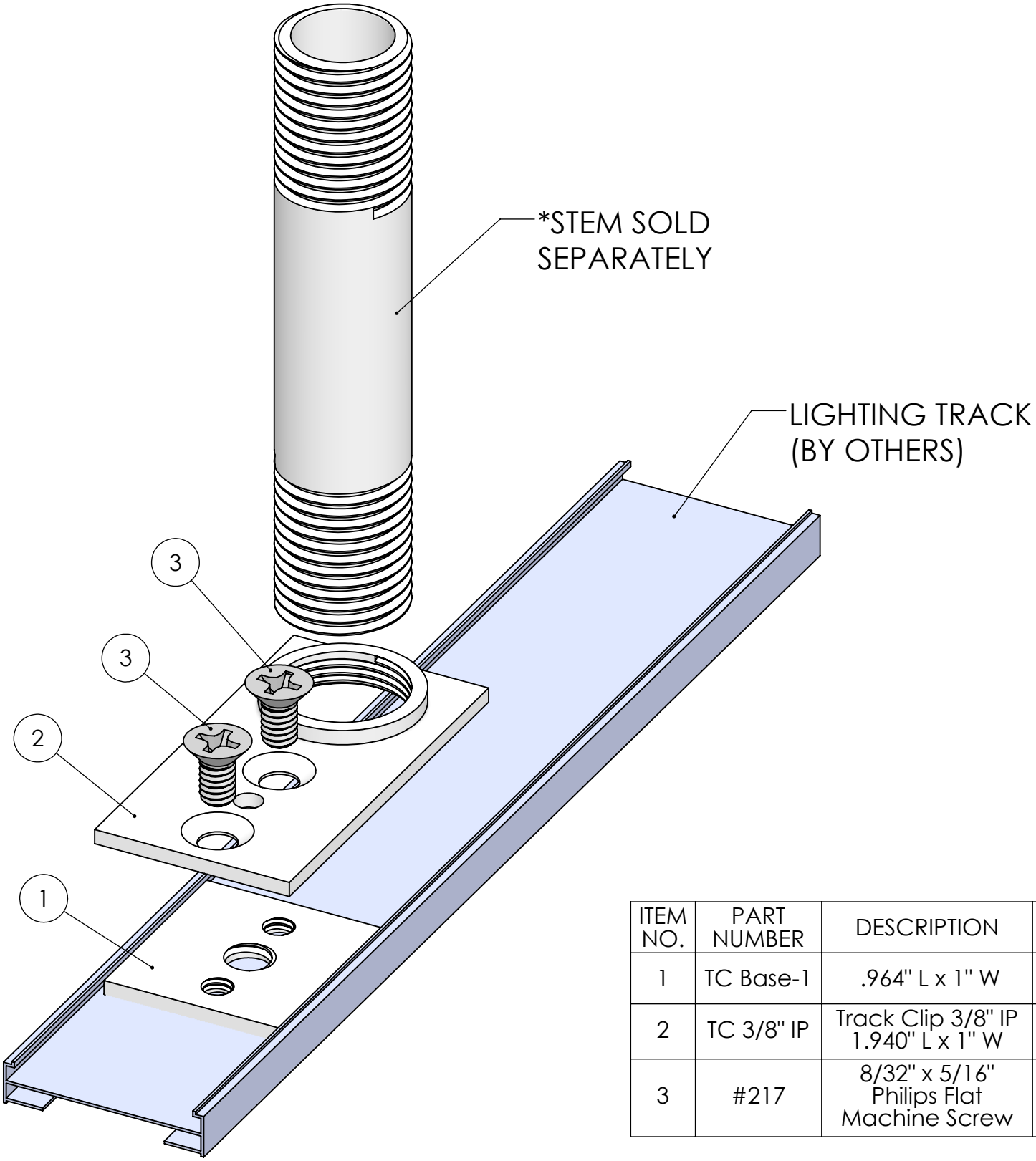

ITEM NO.	PART NUMBER	DESCRIPTION	QTY.
1	TC Base-1	.964" L x 1" W	1
2	TC 3/8" IP	Track Clip 3/8" IP 1.940" L x 1" W	1
3	#217	8/32" x 5/16" Philips Flat Machine Screw	2

Pendant Systems
1670 Winchester Rd.
Bensalem, PA 19020
P-215-638-8552
F-215-638-8554
www.PendantSystems.com

UNLESS OTHERWISE SPECIFIED DIMENSIONS ARE IN BOTH INCHES & MILLIMETERS UNLESS OTHERWISE NOTED TOLERANCES:
LINEAR: XX= .02" XXX= ±.010" ANGULAR: ± 1 Degree

FINISH:

Part #

Track Clip Kit 3-8-1

DO NOT SCALE DRAWING

MATERIAL:

Title:

DEBUR AND BREAK SHARP EDGES

REVISION

DRAWN DATE: 6/13/18

Drawn By: MWR

SCALE: NTS

SHEET 1 OF 1